All dimensions in mm unless otherwise stated.

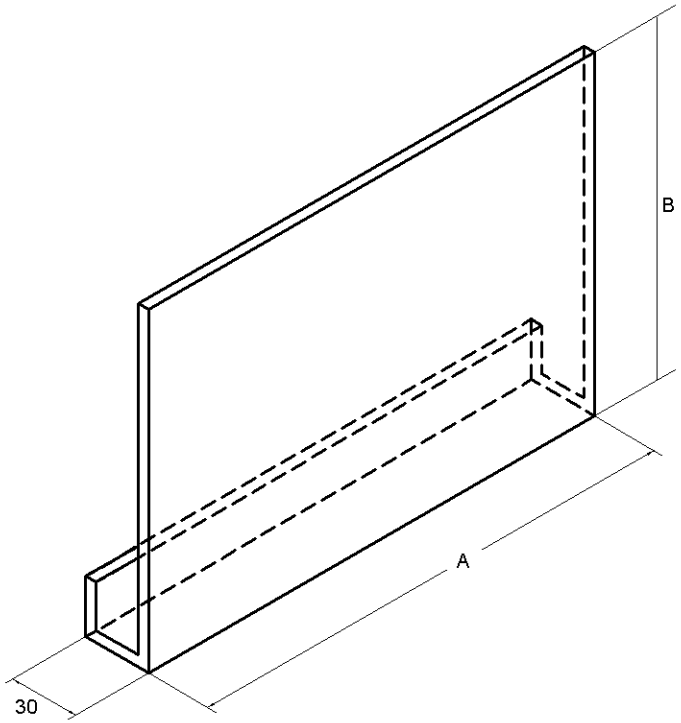

A (mm)		B (mm)
450	x	350
600	x	350
600	x	650

Material: Composite 4mm

Tolerance: +/- 1mm

A SIGNED APPROVAL OF THIS DRAWING IS REQUIRED FROM THE CUSTOMER PRIOR TO MANUFACTURE.

APPROVAL

Signed:.....

Print:.....

Date:.....

Copyright Marley Alutec Ltd.

PROJECT:
COMPOSITE FASCIA & SOFFIT SYSTEM

TITLE:
GABLE BOX C

Rev	Amendments	Date

DWG No:	REV:
DATE:	SCALE: NTS
DRAWN BY: BB	

ALUTEC
ALUMINIUM RAINWATER SYSTEMS
MARLEY ALUTEC LTD
Unit 1 (G-H) Viking industrial Park,
Hudson Road, Elms Farm Industrial Estate,
Bedford MK41 0LZ
Tel: 01234 359438 Fax: 01234 357199